Single Station Gauge Isolator Valves

Reservoir Equipment

Specification

Construction:
Single Station: Cast iron and steel. Knurled plastic knob with 'Push to read' plus 'Twist to lock' or 'Push to read' only type.

Max. working pressure:
350 bar.

Port size:
Single Station: G1/4.

Weight:
Single Station: 0.90 Kg.

Single Station Installation Details

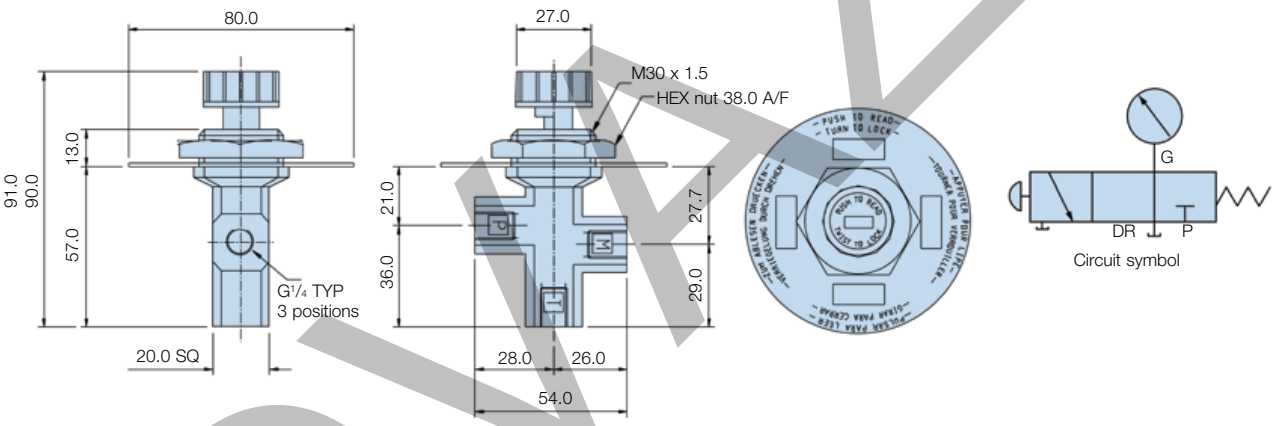

Operation Details

Single Station

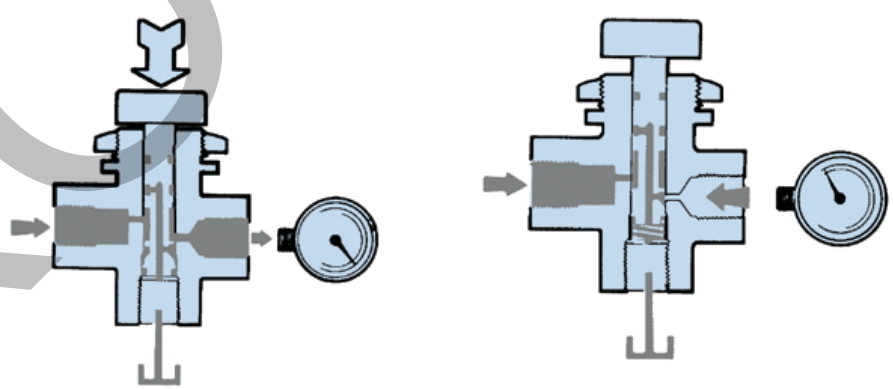

Ordering Information

Standard products table

Part number	Description	Weight
GI1486	Single station gauge isolator "Push to read" plus "twist to lock" type	0.90 Kg
GI1414	Single station gauge isolator "push to read" only type	0.90 Kg

KOVAZ.CZ